eloFlex Mini 470EFR...

eloFlex Mini 470EFR... is a configurable safety relay with 2 independent safety inputs (2-channel) and up to 2 safety outputs as well as 1 control output. The internal logic link is configured specifically for each customer.

Product characteristics

- Up to 2 safety functions can be implemented in one device
- The number of safety outputs (relays) can be set according to the individual requirement, making this a cost-effective solution.
- Increased functionality using less space in the switch cabinet.
- The units are tamper-proof as are pre-configured during ordering.
- Cost-effectivel and reliable by unique identification of configuration for maintenance, commissioning and service
- Can be perfectly adapted to your application through various configuration options, offering maximum flexibility
- Additional sensors can be connected via elobau interfaces for input expansion

The following logic and safety functions are available:

Logic link:	Safety functions:
AND	t_{ON} / t_{OFF}
OR	Safetyfunction
XOR	2-hand
NAND	Safetygate
NOR	E-stop
XNOR	N.O./N.O.
NOT	or N.O./N.C.

Technical drawing

IMAGE 1/3

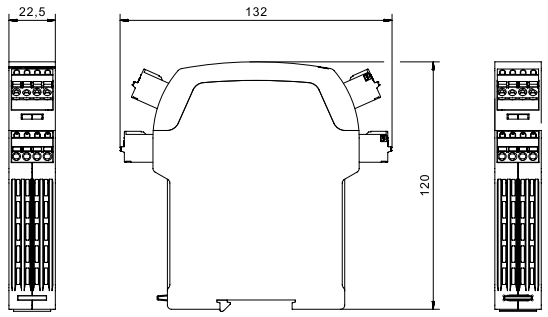

IMAGE 2/3

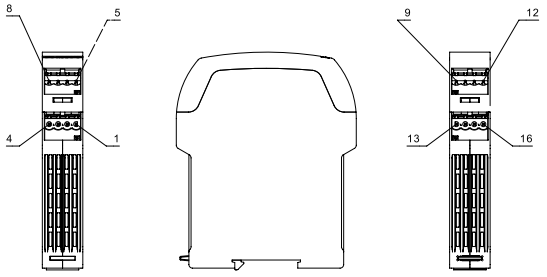

IMAGE 3/3

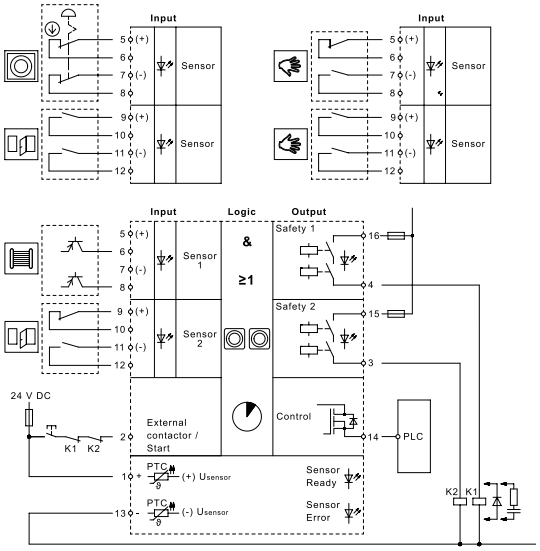

Electrical data

Attribute	470EFR2D12K...	470EFR3E11K...	470EFR3E12K...
Max. switching voltage at safety output	30 V DC		
Max. switching voltage at control output	26.4 V DC		
Max. switching voltage at safety output	250 V AC		
Max. switching current at safety output	3 A		
Max. switching current at control output	0.7 A		
Max. switching power at control output	16.8 W		
Max. switching power at safety output	750 VA		
Number of configurable relay safety outputs	2	1	2
Number of electronic control outputs	2		
Number of redundant safety inputs	2		
Stop category 0 (STO) nach IEC 61800-5-2	yes		
Stop category 1 (SS1) nach IEC 61800-5-2	yes		
EDM/start input	yes		
Start function	Depending on the configuration		
Utilization category	AC-15 / DC-13		
Operating voltage min.	21.6 V DC		
Operating voltage max.	26.4 V DC		
Current consumption	200 mA		
Power consumption	4.8 W		
Cross-short detection	yes		

Electrical data

Attribute	470EFR2D12K...	470EFR3E11K...	470EFR3E12K...
LED display	two-coloured		
Operating time	3000 ms		
Overvoltage category	II		
Min. switching voltage at safety output	–	5 V DC	
Min. switching voltage at control output	21.6 V DC		
Min. switching voltage at safety output	–	5 V AC	
Min. switching current at safety output	–	0.05 A	
Min. switching power at control output	–	0.06 W	
Max. switching power at safety output	90 W		
Min. switching power at safety output	–	0.06 VA	
Max no operating cycles at 0.5A switching current (ohmic load)	1000000	1500000	
Max no operating cycles at 3A switching current (ohmic load)	190000	250000	
Contact form	Abhängig von der Konfiguration		

Safety-related characteristics

Attribute	470EFR2D12K...	470EFR3E11K...	470EFR3E12K...
PL acc. to EN ISO 13849-1	d	e	
SIL acc. to IEC 61508	2	3	
SIL CL acc. to IEC 62061	2	3	
PFHD according to IEC 61508	8,75x10^-8 1/h	3,86x10^-8 1/h	
Operating life	20 Tm		
Category acc. to EN ISO 13849-1	3	4	
Hardware fault tolerance (HFT) according to IEC 61508	1		

Mechanical data

Attribute	470EFR2D12K...	470EFR3E11K...	470EFR3E12K...
Dimensions	130 x 22,5 x 120 mm (H/B/T)		

Material information

Attribute	470EFR2D12K...	470EFR3E11K...	470EFR3E12K...
Housing material	PA, PC		
Housing colour	schwarz		

Environmental conditions

Attribute	470EFR2D12K...	470EFR3E11K...	470EFR3E12K...
Protection class	IP30 IEC60529		
Operating temperature min.	0 °C		
Max. operating temperature	55 °C		
Min. storage temperature	-40 °C		
Max. storage temperature	70 °C		
Relative humidity	5 - 85 %		
Protection class, installation space	IP55 IEC60529		
Shock resistance (Norm)	30 g / 11 ms		
Continuous shock resistance (Norm)	10 g / 16 ms		
Vibration resistance (Norm)	10 ... 55 Hz		
Air pressure	860 - 1060 hPa		
Delta tmax	0.5 °C/min		

Installation

Attribute	470EFR2D12K...	470EFR3E11K...	470EFR3E12K...
Mounting type	Mounting rail		
Weight	200 g		
Torque for connection terminals	0.5 N m		

Connection

Attribute	470EFR2D12K...	470EFR3E11K...	470EFR3E12K...
Spring-type terminals	yes		
Screw terminals	Optional		
Double terminals	Optional		
Pluggable connection terminals	yes		
Min. connection cross section	0.2 mm²		
Max. connection cross section	2.5 mm²		

Approvals

Attribute	470EFR2D12K...	470EFR3E11K...	470EFR3E12K...
Certified in accordance with	EN ISO 13849-1 IEC 61508 IEC 62061 UL 508 / CSA 22.2		
CE label	yes		